RoHS

REV.	ECN NO.	LOCAS.	DESCRIPTION	DATE	DESIGN
A			NEW DRAWING		

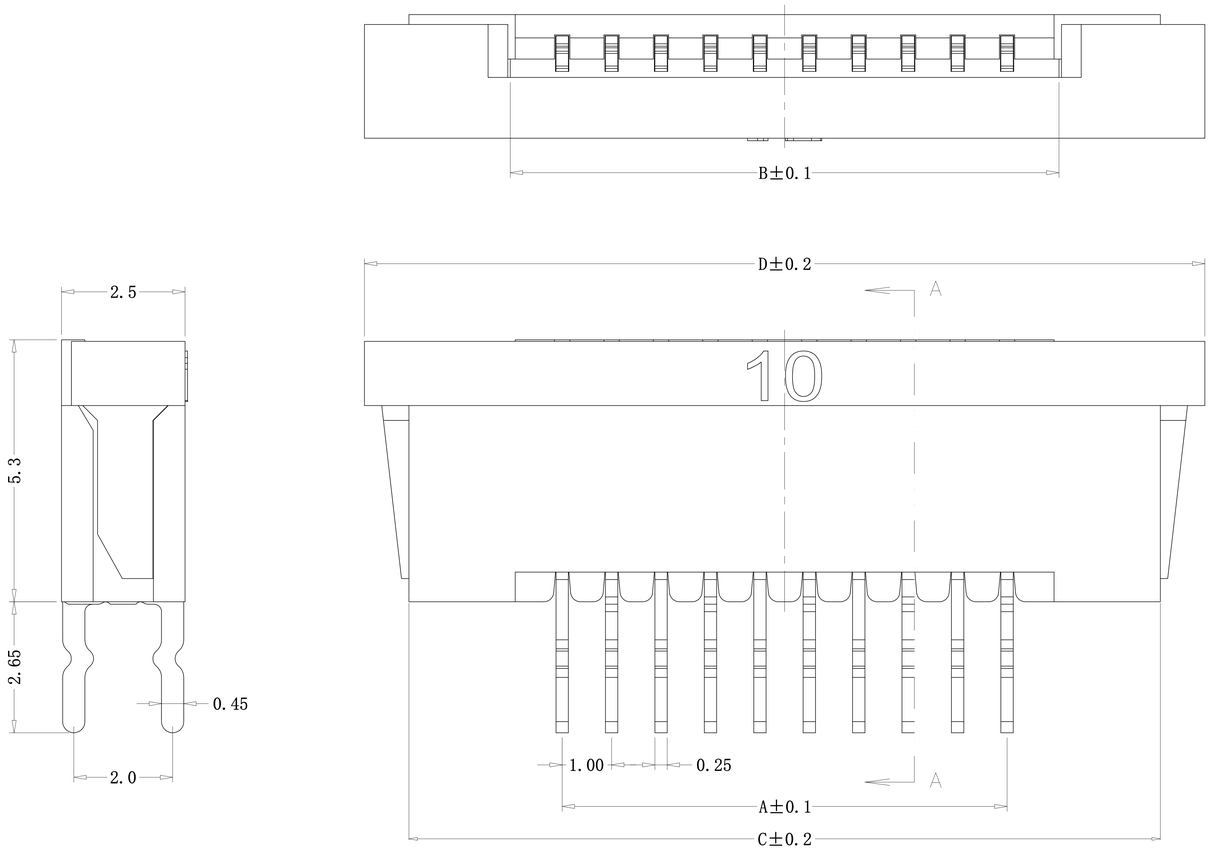

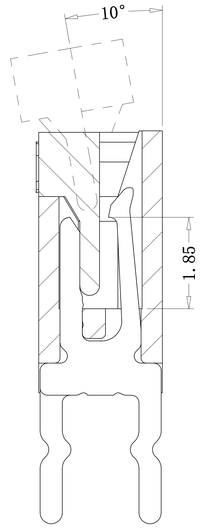

SECTION A—A

孔位	A	B	C	D
6	5	7.15	11.20	13.10
8	7	9.15	13.20	15.10
10	9	11.15	15.20	17.10
12	11	13.15	17.20	19.10
14	13	15.15	19.20	21.10
15	14	16.15	20.20	22.10
16	15	17.15	21.20	23.10
18	17	19.15	23.20	25.10
20	19	21.15	25.20	27.10
22	21	23.15	27.20	29.10
24	23	25.15	29.20	31.10
25	24	26.15	30.20	32.10
26	25	27.15	31.20	33.10
28	27	29.15	33.20	35.10
29	28	30.15	34.20	36.10
30	29	31.15	35.20	37.10

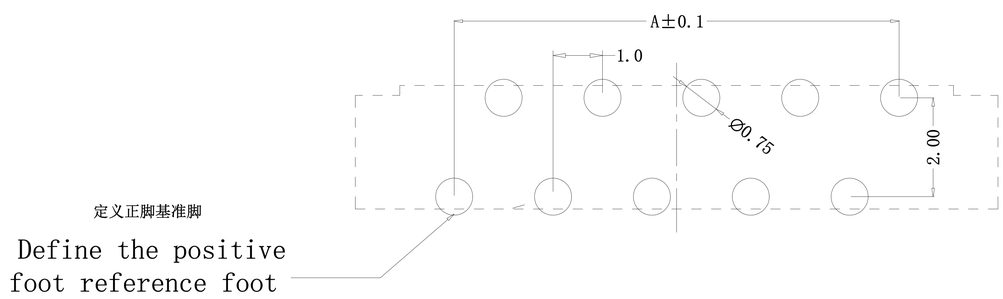

PC BOARD LAYOUT

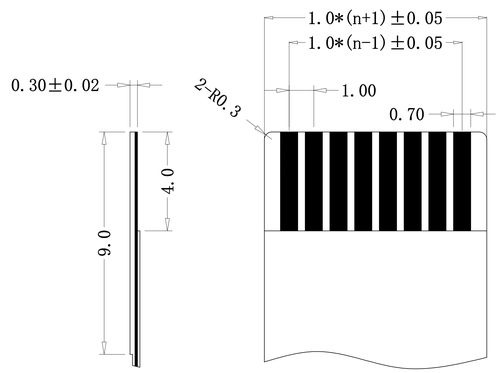

PROPER CABLE (SCALE 2:1)

技术要求(Technical Index):

1. 材质与表面处理(Material And Finish):
   基座（Housing）and 盖子（Cover）：LCP UL94V-0 Nature Or Black;
   端子（Terminal）:Phosphor Copper Au/Sn Plated;
   焊片（Solder）：Copper Alloy Au/Sn Plated;
2. 工作温度(Temperature range)：-20° C～+85° C.
3. 额定电压(Rated voltage)：50V，AC/DC.
4. 额定电流：0.5A,AC/DC.
5. 接触电阻(Contact resistance)：≤20mΩ.
6. 绝缘电阻(Insulation resistance):≥800MΩ.
7. 耐电压(Withstanding Voltage):500V AC/minute.

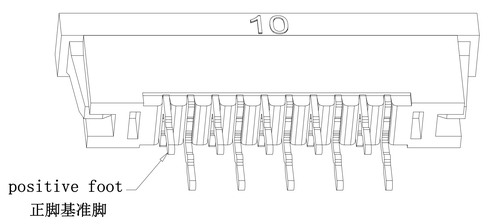

DESIGN:	Xiping Huang		
CHECK:	Ke Tian		
APPROVED:	Youquan Xu		
DIM	TOL	DIM	TOL
X.	±0.25		
X.X	±0.20	X°.	±3.0°
X.XX	±0.15	X.X°	
X.XXX		X.XX°	
		X.XXX°	

广东国连电子有限公司
GUANGDONG GUOLIAN ELECTRONICS CO.,LTD

TITLE: 1.0mm FPC 直插式(正脚)

PART NO. 1.0K-H-NP-***

REV. A | SCALE: N/A | UNIT: mm | SHEET: 1/1