RoHS

REV.	ECN NO.	LOCAS.	DESCRIPTION	DATE	DESIGN
A			NEW DRAWING		

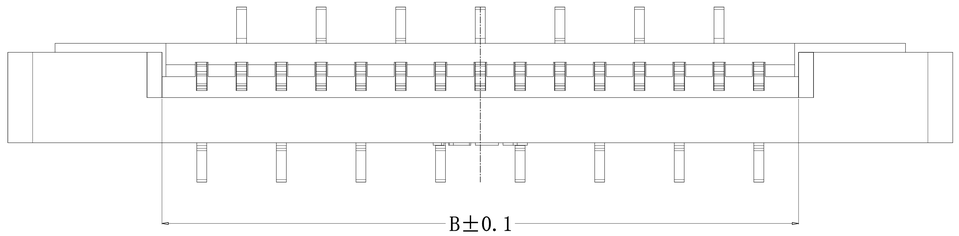

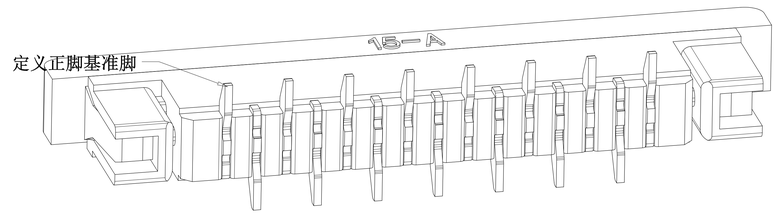

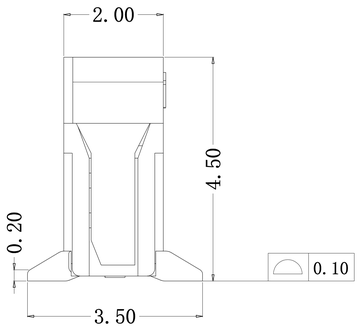

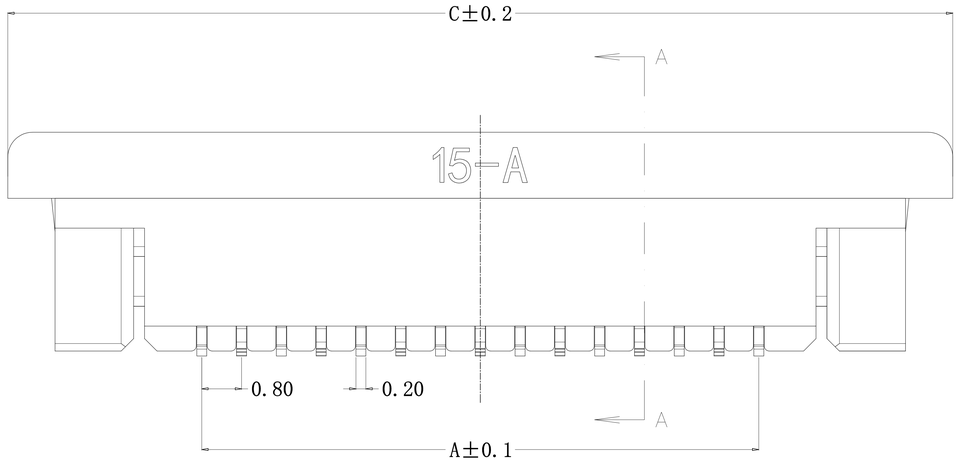

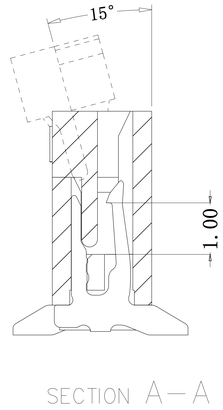

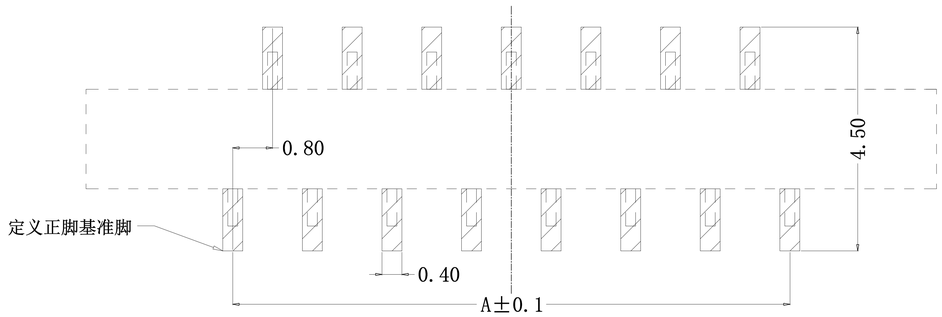

PC BOARD LAYOUT

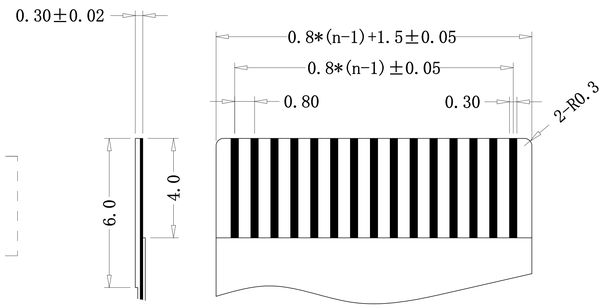

PROPER CABLE (SCALE 2:1)

孔位	A	B	C
4	2.4	4	10.3
5	3.2	4.8	11.1
6	4	5.6	11.9
7	4.8	6.4	12.7
8	5.6	7.2	13.5
9	6.4	8	14.3
10	7.2	8.8	15.1
11	8	9.6	15.9
12	8.8	10.4	16.7
13	9.6	11.2	17.5
14	10.4	12	18.3
15	11.2	12.8	19.1
16	12	13.6	19.9
17	12.8	14.4	20.7
18	13.6	15.2	21.5
19	14.4	16	22.3
20	15.2	16.8	23.1
21	16	17.6	23.9
22	16.8	18.4	24.7
23	17.6	19.2	25.5
24	18.4	20	26.3
25	19.2	20.8	27.1
26	20	21.6	27.9
27	20.8	22.4	28.7
28	21.6	23.2	29.5
29	22.4	24	30.3
30	23.2	24.8	31.1
31	24	25.6	31.9
32	24.8	26.4	32.7
33	25.6	27.2	33.5
34	26.4	28	34.3
35	27.2	28.8	35.1

技术要求(Technical Index):

1. 材质与表面处理(Material And Finish):
   基座（Housing）and 盖子（Cover）：LCP UL94V-0 Nature Or Black;
   端子（Terminal）:Phosphor Copper Au/Sn Plated;
   焊片（Solder）：Copper Alloy Au/Sn Plated;
2. 工作温度(Temperature range)：-25° C～+85° C.
3. 额定电压(Rated voltage)：50V，AC/DC.
4. 额定电流：0.4A,AC/DC.
5. 接触电阻(Contact resistance)：≤20mΩ.
6. 绝缘电阻(Insulation resistance):≥500MΩ.
7. 耐电压(Withstanding Voltage):200V AC/minute.

DESIGN:	Xiping Huang		
CHECK:	Ke Tian		
APPROVED:	Youquan Xu		
DIM	TOL	DIM	TOL
X.	±0.25		
X.X	±0.20	X°.	±3.0°
X.XX	±0.15	X.X°	
X.XXX		X.XX°	
		X.XXX°	

广东国连电子有限公司
GUANGDONG GUOLIAN ELECTRONICS CO.,LTD

TITLE: 0.8立贴（厚度2.0）无焊片

PART NO. 0.8-A-NPB

REV. A | SCALE: N/A | UNIT: mm | SHEET: 1/1